Step 4

1. Attach the Lat Cable (#11) to the Top Plate (#13).
2. Attach the Row Cable (#10) to the Cable Adaptor(#22).
3. Attach four 4.5" Pulley (#16) to the Lat Tube (#4) using:
   four M10*50 HHB (#43) eight Φ11*Φ20*2 Flat Washer (#66)
   four M10 Nylon lock Nut (#51)
4. Attach one 4.5" Pulley (#16) and one 3.5" Pulley (#57) to the Front Frame (#3) using:
   three M10*50 HHB (#43) six Φ11*Φ20*2 Flat Washer (#53)
   three M10 Nylon lock Nut (#51)
5. Attach two 4.5" Pulley (#16) and one Pulley Bracket (#19) to the Lat Cable (#11) and Row Cable (#10) using:
   two M10*50 HHB (#43) four Φ11*Φ20*2 Flat Washer (#53)
   two M10 Nylon lock Nut (#51)
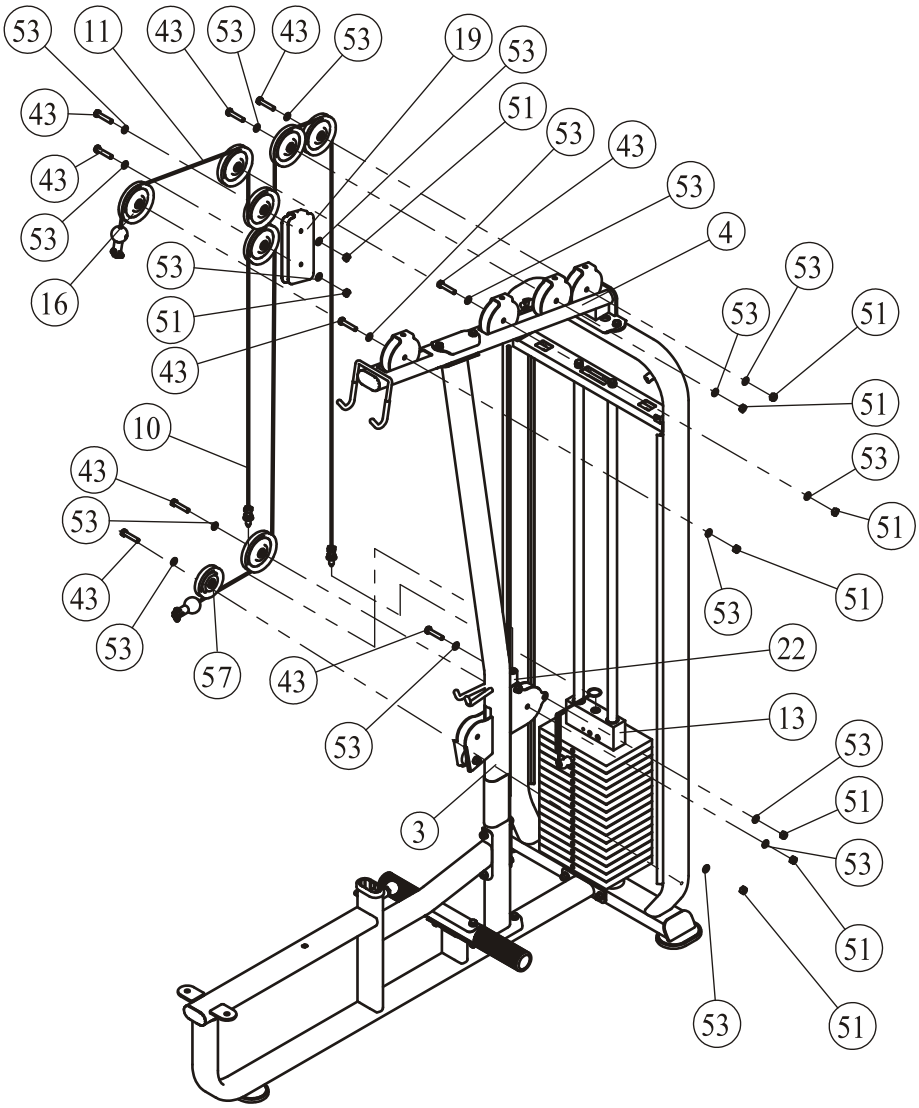
NOTE: Make sure that the Pully Bracket's head up as shown.